5910126903

petrol pruning saw
PCS26 scheppach (DIY)

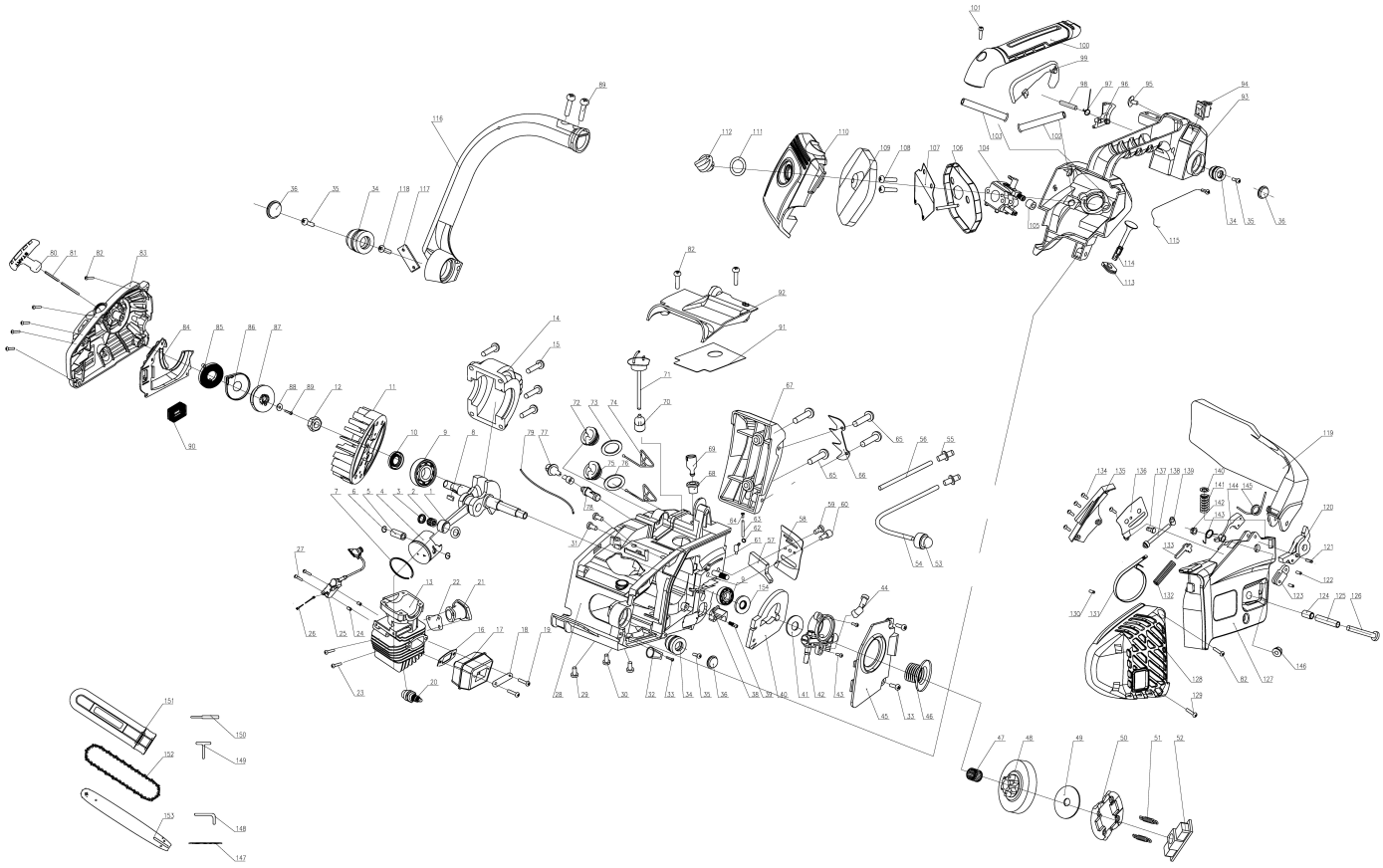

Main products

5910126903

Spare part list

275115 - 0142 - PCS26 - -

Spare	Description	additional	Item	Abb.	ConstructStatus
3910102033	crank shaft assy		1	A	*
3910102001	needle bearing ball	K8x11x8-TV DIN 5405-1&/ISO 30302		A	*
3910102002	snap snap		3	A	*
3910102003	piston	Ø 34.95 x 32	4	A	*
3910102004	piston pin	Ø 8 x 27	5	A	*
3910102005	snap ring	Ø 9,2 x 0,8	6	A	*
3910102006	piston ring	Ø 33 / 35 x 1,5	7	A	*
5910108002	Flywheel		11	A	*
1910103067	nut M8x1	M8 x 1 Feingewinde	12	A	*

5910126903

petrol pruning saw
PCS26 scheppach (DIY)

Main products

5910126903

Spare part list

275115 - 0142 - PCS26 - -

Spare	Description	additional	Item	Abb.	ConstructStatus
5910108003	Cylinder		13	A	*
1910103049	screw M5x20 part B10	M5x20	15	A	*
3910102038	washer muffler		16	A	*
5910108004	exhaust cpl.	Euro5	16-18	A	*
02798529	Linsenschraube	M5x45	19	A	*
3904801048	spark plug	L8RTC / SW19	20	A	*
3910102008	hose - air	Euro2	21	A	*
3910102009	washer intake carburator		22	A	*
5910108005	Ignition	xy RY25BS	25	A	*
02008417	hexagon bolt	M4x20 DIN 84	27	A	*
1910103067	nut M8x1	M8 x 1 Feingewinde	31	A	*
02798123	oval head sheet metal screw	B4.2x13	33	A	*
3910102011	pad rubber		34	A	*
02798138	Linsen-Blechschraube	B 4.8x38 DIN7981	37	A	*
3910102013	chain catcher		38	A	*
3910102040	oil pumpe with hose	Ø 6 Anschluss	42,43	A	*
3910102041	worm gear		46	A	*
39101049031	needle bearing ball	K10x13x13 DIN 5405-1/ ISO 3030	47	A	*
3910102015	cover-drum-clutch		48	A	*
3910102042	washer-drum clutch part 48		49	A	*
3910102016	clutch cpl.		50-52	A	*
3910106004	oil vacuole	Ø20x35	53	A	*
3910102051	hose oil carbuertor		54,55	A	*
02798222	SHEET METAL SCREW B4,2X9,5	4.2x10	59	A	*
02798132	Bolt, left hand thread	4.8x13	65	A	*

5910126903

petrol pruning saw
PCS26 scheppach (DIY)

Main products

5910126903

Spare part list

275115 - 0142 - PCS26 - -

Spare	Description	additional	Item	Abb.	ConstructStatus
39101049034	spike		66	A	*
3904803029	fuel filter	Anschluss Ø 4,5	70	A	*
3910102051	hose oil carbuertor		71,55	A	*
3910102018	fuel cap cpl.	Ø24,5	72-74	A	*
3910102019	oil cap cpl.		74-76	A	*
5910109054	oil filter cpl. part 83-85		77,78	A	*
1910103017	start handle		80	A	*
5910126001	Starterkit cpl.	design 2024	80-89	A	*
1910103030	start stretching wire 3x920 part A45		81	A	*
02798124	screw	B 4.2x16, 4.6, verzinkt, DIN7981	82	A	*
02798138	Linsen-Blechschraube	B 4.8x38 DIN7981	89	A	*
3910102021	Air inlet hose		90	A	*
3910102047	rear handle		93	A	*
88000478	Ein-/ Ausschalter für Lampe	KND1-6/1 6A 250V	94	A	*
02798124	screw	B 4.2x16, 4.6, verzinkt, DIN7981	101	A	*
3910102051	hose oil carbuertor		102, 54-56,71	A	*
3910102023	carburator	HLIC MC14B 183 A-16 Ø12,7	104	A	*
3910102024	Air filter		106,109	A	*
02798529	Linsenschraube	M5x45	108	A	*
3910102052	air filter		109	A	*
3910102025	cover-air-filter		110	A	*
3910102026	knob-air-filter cpl.		111,112	A	*
3910102027	choke lever cpl.	Ø12/5x49	113,114	A	*
3910102053	rod throttle		115	A	*
3910102028	Handle		116	A	*

5910126903

petrol pruning saw
PCS26 scheppach (DIY)

Main products	Spare part list
5910126903	275115 - 0142 - PCS26 - -

Spare	Description	additional	Item	Abb.	ConstructStatus
02798132	Bolt, left hand thread	4.8x13	118	A	*
5910108006	Clutch Cover cpl.		119-146, 82	A	*
5910108008	Shield-Muffler		128	A	*
1910103062	screw M5x12 part B34	M5x12	129	A	*
02798123	oval head sheet metal screw	B4.2x13	134	A	*
3910102031	chain tensioner kpl.		137-139	A	*
02098503	hexagon bolt	M5 selbstsichernd	142	A	*
1910103004	nut M8	M8, verzinkt, DIN6923	146	A	*
01091105	Hexagon stud wrench	SW4 blank	148	A	*
1910103076	spark plug wrench	SW 19/13	149	A	*
5910701016	screw driver carburator	Pac-Man V Ø6,2/5mm	150	A	*
3904801039	Blade protection for pole saw	10"	151	A	*
7910100739	saw chain Kangxing 3/8LP-40	3/8LP-40 - Länge 10" - Teilung 3/8 (9,525 mm) - Treibgliedstärke 1,3	152	A	*
7910100740	chainsaw guide bar Kangxin AP10-40-509P	AP10-40-509P - Länge 10" - 3/8 Teilung (9,525 mm) -	153	A	*
7904800701	mixing bottle		o.Abb.	A	*

!!! Do you know: From now on you can view spare parts lists in our spare parts shop and order spare parts and accessories directly. More information can be found here: https://www.scheppach.com/Shop.aspx